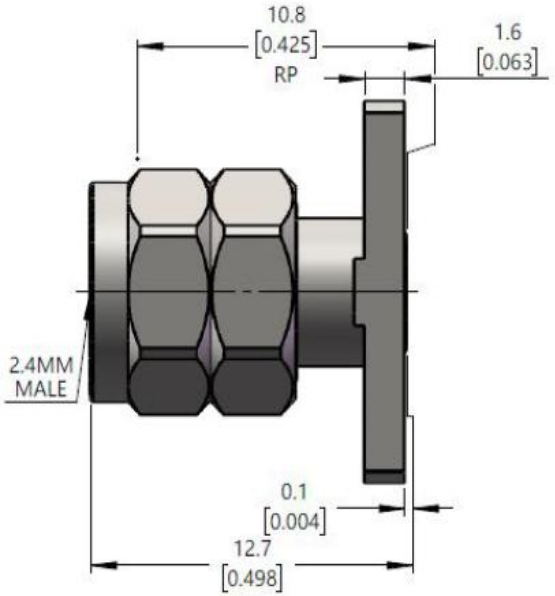

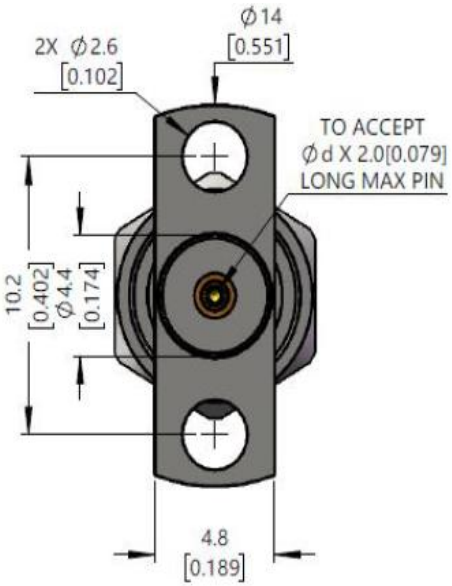

No.	Model	Pin Size Ød
1	2.4-JFD80509	0.23 [0.009]
2	2.4-JFD80512	0.30 [0.012]
3	2.4-JFD80515	0.38 [0.015]
4	2.4-JFD80520	0.51 [0.020]

Electrical & Environmental Characteristics	
Impedance	50 Ω
Insulation Resistance	5000 MΩ
Operating Frequency	DC~50GHz
Dielectric Withstanding Voltage	1000V
VSWR	≤1.15
Insertion Loss	≤0.05*Sqt(f_GHz)
Operating Temperature	- 55~+165℃
Material & Coat-Plating	
Inner Conductor	Beryllium Copper, Gold
Dielectric	PEI 1000
Body	Stainless Steel,Passivated
Coupling Nut	Stainless Steel,Passivated

THIS DRAWING IS A CONTROLLED DOCUMENT		DWN	Suzhou Talent Microwave,Inc
		CHK	
Unit mm	TOLERANCES UNLESS OTHERWISE SPECIFIED 0 PLC ±0.25 1 PLC ±0.15 2 PLC ±0.12 3 PLC ±- 3 PLC ±- ANGLES ±1°	APVD	Product Model 2.4-JFD80515 2.4mm male Flange Connector
		PRODUCT SPEC	
		APPLICATON SPEC	
MATEIAL SEE TABLE	FINISH SEE TABLE	WEIGHT	SIZE A4 / GAGE CODE 0T8L4 / DRAWING NO
		CUSTOMER DRAWING	SHEET1 OF 1 / RVE 1